Space Saver - Electric

A highly energy efficient fan convector that fits neatly into the plinth of a kitchen unit and eliminates the need for conventional radiators

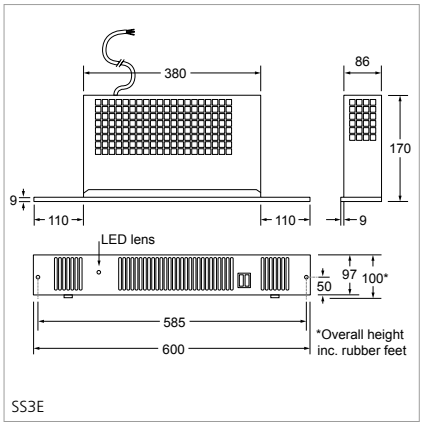

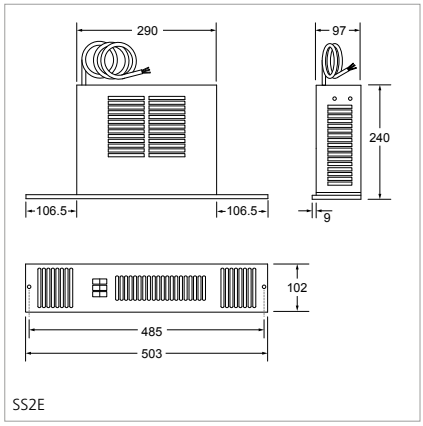

Features

- Makes room for extra kitchen storage, work space, or additional appliances
- More affordable than underfloor heating
- Get the flooring you want
- Discreet heating
- Easy to use
- Suitable for plinth heights from 80mm upwards
- Contemporary design with a wide choice of grille colours to suit interior decoration
- Two heat outputs and fan only option for instant heat and cool air circulation
- Low voltage bathroom model available for high humidity areas
- Free five years parts and labour warranty
- To see which Space Saver plinth heater is most suitable to heat your kitchen, use the Heat Loss Calculator on our website: https://smithsep.co.uk/heat-loss-calculator/

Applications

Kitchen and utility

Motor

AC

Finish

Fascia grille: Stainless Steel or White RAL 9010 (SS2E, SS3E)
See under attachments for other fascia grille colours

Installation

Correct fascia grille opening must be cut to allow sufficient air intake
SS2E and SS3E - 20mm clearance above unit required
SS80E - 10mm clearance above unit required
Model secured to plinth by two screws through fascia grille
Unit must be earthed

Controls

Wireless temperature control featuring comfort, set back and run back timer (battery operated) supplied
Overheat protection: thermal cut-out. Manual reset procedure: switch power off at unit or mains, wait 5 minutes, switch power on
SS2E: three rocker switches On/off, 1kW, 2kW
SS3E: two rockers switches 1kW, 2kW, 3kW
SS80E: three rocker switches On/off, 0.6kW, 1.2kW

Accessories

Grilles SS2E: brown (RAL 8016), black (RAL 9005) white (RAL 9010), chrome
Alternative grilles for SS2E fit over the supplied grille
Grilles SS80E: brown (RAL 8016), black (RAL 9005), white (RAL 9010)

Attachments

Brown, black, chrome or white fascia grilles (grilles shown are for colour reference only and switch configuration varies by product). See below for further details.

Space Saver - Electric

A highly energy efficient fan convector that fits neatly into the plinth of a kitchen unit and eliminates the need for conventional radiators

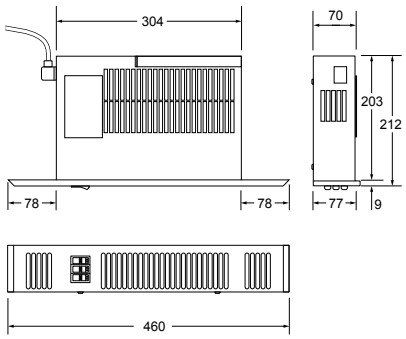

SS80E

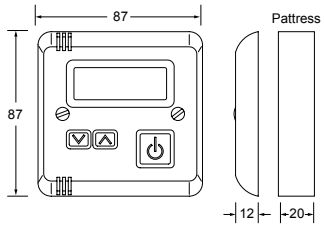

Wall Controller

Outputs

Model	Heat output (kW)	Total Power Consumption (kW)	Fused spur	Mains cable	Sound levels (dBA)	Fascia grille finish colour	Fan-only	Minimum plinth height (mm)
SS2E	1kW/2kW	1kW/2kW	10A	2m	42	Stainless Steel	•	100
SS3E	1kW/2kW/3kW	1kW/2kW/3kW	13A	2m	42	Stainless Steel	•	100
SS80E	0.6kW/1.2kW	0.6kW/1.2kW	10A	2m	38	Stainless Steel	•	80

Ordering guide

Model	Packed Wt (kg)	Product Codes
Electric		
SPACE SAVER SS2E (STAINLESS STEEL GRILLE)	4	HPSS10070
SPACE SAVER SS2E (WHITE GRILLE)	4	HPSS10079
SPACE SAVER SS3E (STAINLESS STEEL GRILLE)	5	HPSS10075
SPACE SAVER SS3E (WHITE GRILLE)	5	HPSS10084
SPACE SAVER SS80E (STAINLESS STEEL GRILLE)	4	HPSS10073

Attachments	Colour	Product Codes
SPACE SAVER SS2E GRILLE	BROWN	HASS10131
SPACE SAVER SS2E GRILLE	BLACK	HASS10132
SPACE SAVER SS2E GRILLE	WHITE	HASS10133
SPACE SAVER SS2E GRILLE	CHROME	HASS10134
SPACE SAVER SS80E GRILLE	BROWN	HASS10151
SPACE SAVER SS80E GRILLE	BLACK	HASS10152
SPACE SAVER SS80E GRILLE	WHITE	HASS10153
SPACE SAVER SS80E GRILLE	CHROME	HASS10164
Accessories		
FLEXIBLE HOSES 15MM PAIR		HAGA95002

Space Saver - Electric

Most Space Saver models are supplied with a detachable brushed Stainless Steel fascia grille. Alternative attachment grille colours are shown below to match your application.

SS2E

SS2E - supplied complete with detachable brushed Stainless Steel grille

SS2E - supplied complete with detachable white grille

Attachments (to be ordered separately)

SS2E - brown grille

SS2E - black grille

SS2E - chrome grille

SS2E - white grille

SS3E

SS3E - supplied complete with brushed Stainless Steel grille

SS3E - supplied complete with white grille

SS80E

SS80E - supplied complete with detachable brushed Stainless Steel grille

Attachments (to be ordered separately)

SS80E - brown grille

SS80E - black grille

SS80E - chrome grille

SS80E - white grille

As part our commitment to continuous improvement Smith's Environmental Products may change the specifications of its products without prior notification or public announcement. All descriptions, illustrations, drawings and specifications in this publication present only general particulars and shall not form part of any contract. All dimensions are in mm unless otherwise stated. Please visit our website for the most up to date information.

Issue 013 I April 2022